With pneumatic and electric actuators

ARI-STEVI® 450 / 451

Pneumatic actuator
ARI-DP 32-34T

- Reversible pneumatic actuator
- Actuator with rolling diaphragm
- Air supply pressure max. 6 bar
- Stem protection by bellow
- Maintenance-free O-ring sealing
- Assembly of additional devices acc. to DIN IEC 60534-6

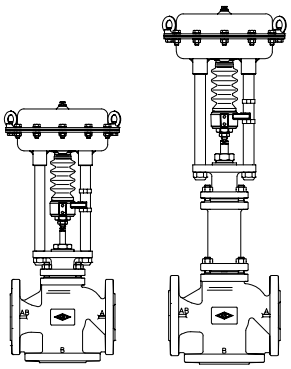

Page 4

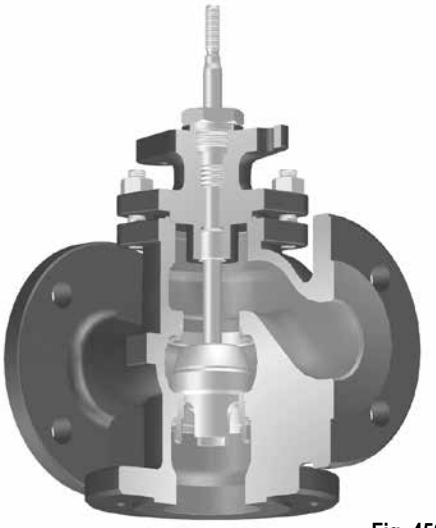

Fig. 450

ARI-STEVI® 450 / 451

Electric actuator
ARI-PREMIO 2,2-25 kN
ARI-PREMIO-Plus 2G 2,2-25 kN

- Enclosure IP 65
- 2 torque switches
- Handwheel
- Additional devices available, e.g. potentiometer

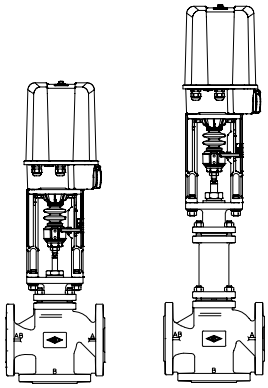

Page 10

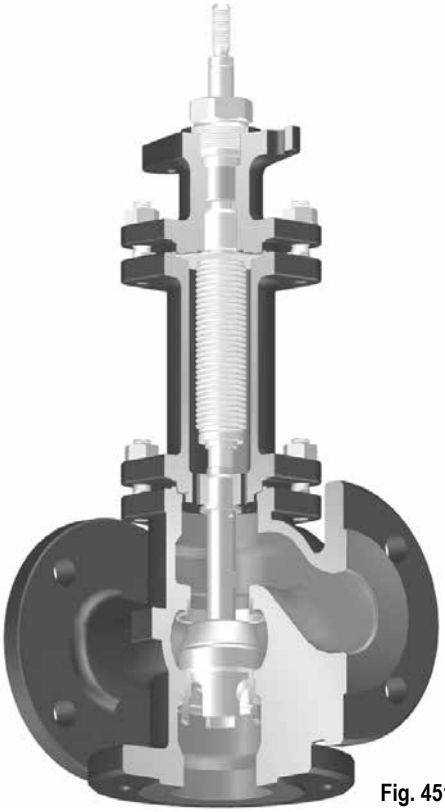

Fig. 451

ARI-STEVI® 450 / 451

Electric actuator
AUMA SAR 07.2 - 14.2

- Enclosure IP 68
- 2 torque switches
- 2 travel switches
- Handwheel
- Overheating protection for motor as standard
- Additional devices available, e.g. potentiometer
- Explosion proof version available

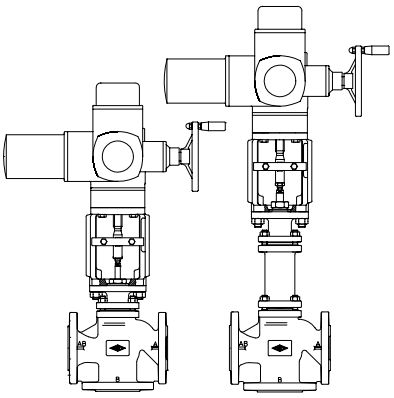

Page 12

Figure	Nominal pressure	Material	Nominal diameter
12.450 / 12.451	PN16	5.1301	DN15-100
22.450 / 22.451	PN16	5.3103	DN15-150
23.450 / 23.451	PN25	5.3103	DN15-150
34.450 / 34.451	PN25	1.0619+N	DN15-150
35.450 / 35.451	PN40	1.0619+N	DN15-150
55.450 / 55.451	PN40	1.4408	DN15-150
Other materials and versions on request.			

Information / restriction of technical rules need to be observed!

ARI-Valves of 5.1301 are not allowed to be operated in systems acc. to TRD 110.

A production permission acc. to TRB 801 No. 45 is available. (5.1301 acc. to TRB 801 No. 45 is not allowed.)

The engineer, designing a system or a plant, is responsible for the selection of the correct valve.

Resistance and fitness must be verified, contact manufacturer for information (refer to Product overview and Resistance list).

Stem sealing

Fig. 450	standard	optional	
	DN15- 150	DN15- 150	DN15- 150
	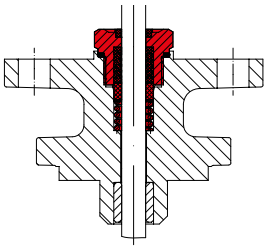	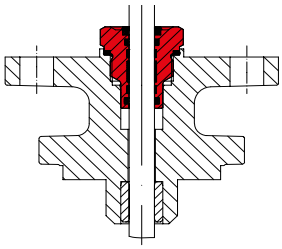	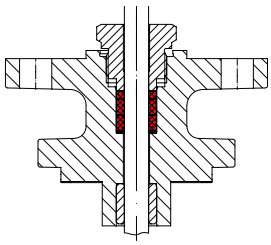
	I. PTFE-V-ring unit -10°C to 220°C	I. EPDM-sealing -10°C to 150°C (allowed for water and steam up to 180°C)	II. PTFE-packing -10°C to 250°C II. Pure graphite-packing -10°C to 450°C

Fig. 451	standard	optional	
	DN15- 150	DN15- 100	DN125-150
	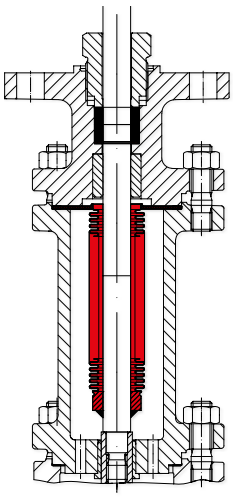	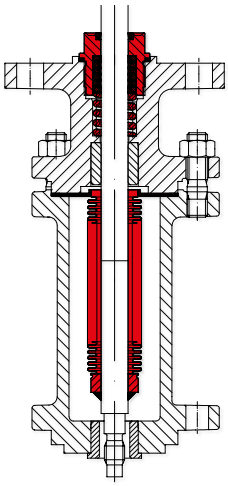	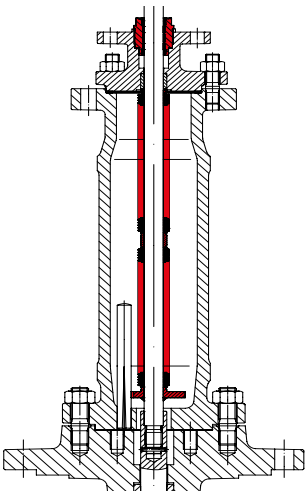
	III. Stainless steel-bellow with pure graphite-packing -60°C to 450°C	III. Stainless steel-bellow with V-ring unit -60°C to 220°C	III. Stainless steel bellows seal with EPDM-sealing -60°C to 150°C (allowed for water and steam up to 180°C)

Pressure-temperature-ratings

Intermediate values for max. permissible operational pressures can be determined by linear interpolation of the given temperature / pressure chart.

acc. to DIN EN 1092-2			-60°C to <-10°C [1]	-10°C to 120°C	150°C	200°C	250°C	300°C	350°C	400°C	450°C
5.1301	PN16	(bar)	--	16	14,4	12,8	11,2	9,6	--	--	--
5.3103	PN16	(bar)	on request	16	15,5	14,7	13,9	12,8	11,2	--	--
5.3103	PN25	(bar)	on request	25	24,3	23	21,8	20	17,5	--	--

acc. to manufacturers standard			-60°C to <-10°C [1]	-10°C to 120°C	150°C	200°C	250°C	300°C	350°C	400°C	450°C
1.0619+N	PN25	(bar)	18,7	25	23,9	22	20	17,2	16	14,8	8,2
1.0619+N	PN40	(bar)	30	40	38,1	35	32	28	25,7	23,8	13,1

acc. to DIN EN 1092-1			-60°C to <-10°C [1]	-10°C to 100°C	150°C	200°C	250°C	300°C	350°C	400°C	450°C
1.4408	PN40	(bar)	40	40	36,3	33,7	31,8	29,7	28,5	27,4	--

[1] Valve with extended bonnet, studs and nuts made of A4-70 (at temperatures below -10°C)

Plug design standard			Guiding	Rangeability
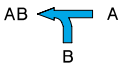 **DN15-100:** **Mixing plug with one rolled seat ring and one screwed seat ring** • Parabolic plug, metal seat; V-port plug, metal seat	- Leakage class IV acc. to DIN EN 60534-4 - Flow characteristic: linear (lin) / linear (lin)	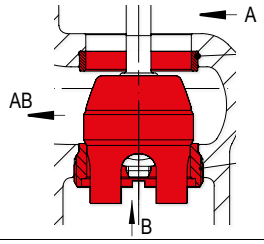	Spindle / Seat ring	30 : 1
 DN125-150 and stainless steel: **Mixing plug with two screwed seat rings** • Parabolic plug, metal seat; V-port plug, metal seat	- Leakage class IV acc. to DIN EN 60534-4 - Flow characteristic: linear (lin) / linear (lin)	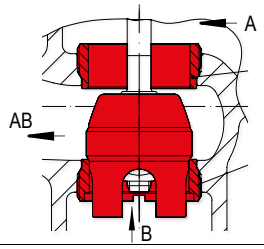	Spindle / Seat ring	30 : 1
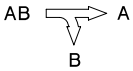 **DN40-150:** **Diverting plug with two screwed seat rings** • Parabolic plug, metal seat; V-port plug, metal seat	- Leakage class IV acc. to DIN EN 60534-4 - Flow characteristic: linear (lin) / linear (lin)	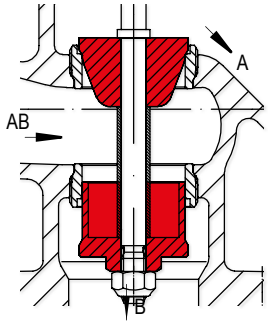	Spindle / Seat ring	30 : 1
Plug design optional			**Guiding**	**Rangeability**
 DN15-100: **Mixing plug with two screwed seat rings** • Parabolic plug, metal seat; V-port plug, metal seat	- Leakage class IV acc. to DIN EN 60534-4 - Flow characteristic: linear (lin) / linear (lin) - further reductions possible	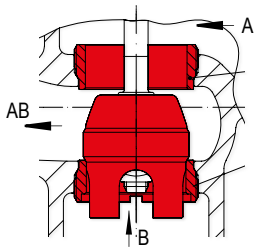	Spindle / Seat ring	30 : 1

Operation		
  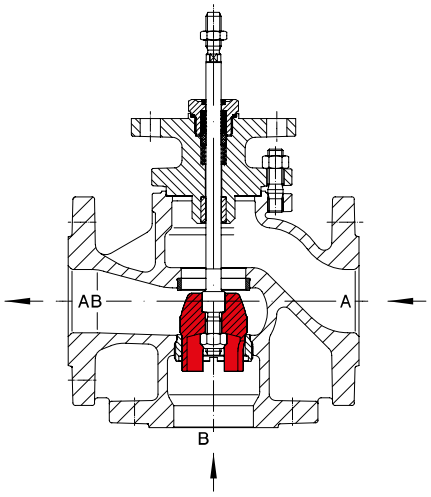 Design with mixing plug DN 15-150	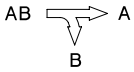 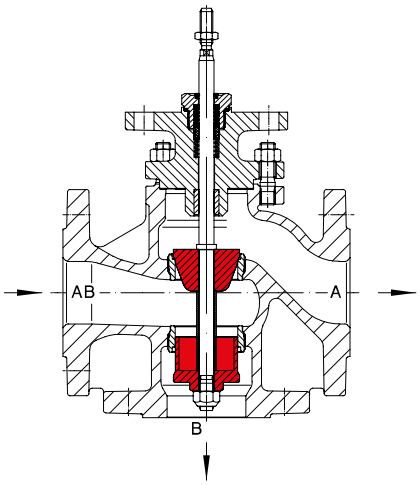 Design with diverting plug DN 40-150 (Attention: reduced Kvs-values)	ARI-Control valves are suitable for use with pneumatic or electric actuators. According to the application two different variations are possible (see drawings on the left) Design with mixing plug as standard. Select when the valve is used for mixing service (2 inlets, 1 outlet). DN 15 - 32 with mixing plug can also be used for diverting service (1 inlet, 2 outlets). In exceptions the design with mixing plug can also be used in diverting service for DN ≥40. Only small closing pressures are possible. Design with diverting plug will be used exclusively for diverting service.

Control valve in 3-way-form with pneumatic actuator DP (3-way mixing valve / 3-way diverting valve)

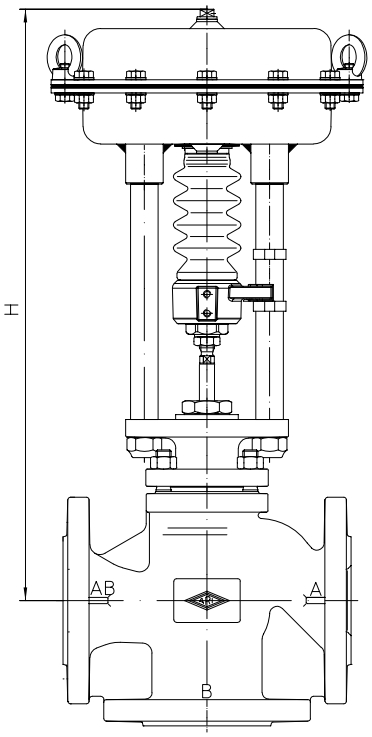

Fig. 450

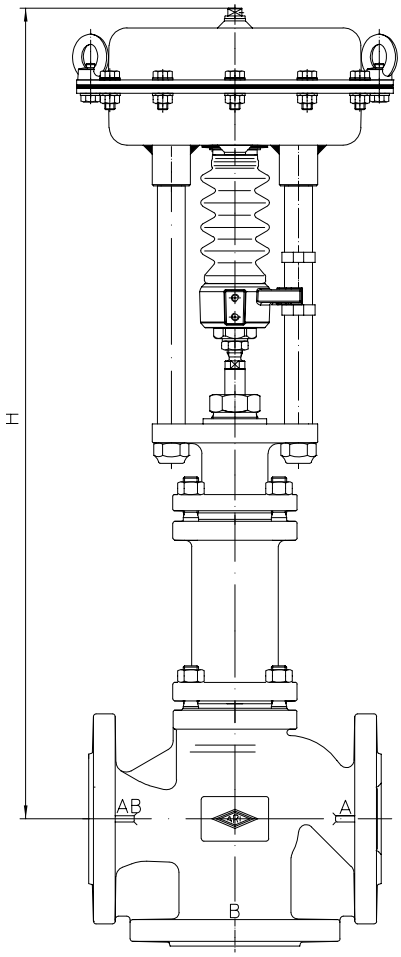

Fig. 451

Heights and weights

DN				15	20	25	32	40	50	65	80	100	125	150
Fig. 450	**DP32**	H	(mm)	450	450	454	480	486	484	520	536	555	602	--
		PN16	(kg)	14	15	16	19	22	26	33	39	56	76	--
		PN40	(kg)	15	16	17	20	23	27	35	42	60	104	--
	DP33	H	(mm)	505	505	509	535	541	539	575	591	610	657	719
		PN16	(kg)	20	21	22	25	28	32	39	45	62	82	110
		PN40	(kg)	21	22	23	26	29	33	41	48	66	110	153
	DP34	H	(mm)	--	--	--	--	--	--	710	726	745	772	834
		PN16	(kg)	--	--	--	--	--	--	69	75	92	112	140
		PN40	(kg)	--	--	--	--	--	--	71	78	96	140	183
	DP34T	H	(mm)	--	--	--	--	--	--	--	--	--	1062	1095
		PN16	(kg)	--	--	--	--	--	--	--	--	--	198	222
		PN40	(kg)	--	--	--	--	--	--	--	--	--	207	239
Fig. 451	**DP32**	H	(mm)	635	635	639	665	655	649	755	768	784	--	--
		PN16	(kg)	17	18	19	22	27	30	39	49	66	--	--
		PN40	(kg)	18	19	20	23	28	32	42	52	72	--	--
	DP33	H	(mm)	690	690	694	720	710	704	810	823	839	1012	1045
		PN16	(kg)	23	24	25	28	33	36	45	55	72	92	120
		PN40	(kg)	24	25	26	29	34	38	48	58	78	120	163
	DP34	H	(mm)	--	--	--	--	--	--	945	958	974	1127	1160
		PN16	(kg)	--	--	--	--	--	--	75	85	102	122	150
		PN40	(kg)	--	--	--	--	--	--	78	88	108	150	193
	DP34T	H	(mm)	--	--	--	--	--	--	--	--	--	1509	1542
		PN16	(kg)	--	--	--	--	--	--	--	--	--	223	249
		PN40	(kg)	--	--	--	--	--	--	--	--	--	234	267

Further dimensions refer to pages 16 - 17.

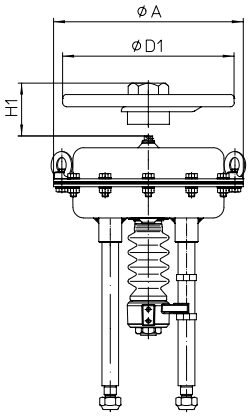

DP32 / DP33 / DP34

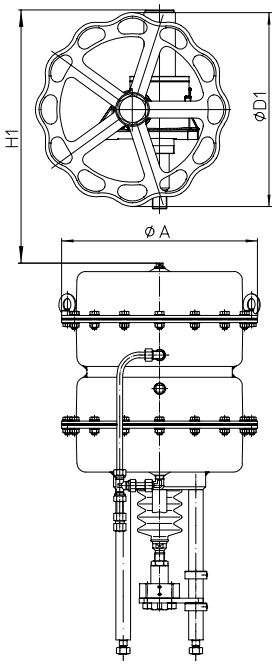

DP34T

Actuator data			DP32	DP33	DP34	DP34T
Ø A		(mm)	250	300	405	
Effective diaphragm area		(cm^2)	250	400	800	1600
Top mounted handwheel	Ø D1	(mm)	225	300	400	
	H1	(mm)	270	284	442	635
	Weight	(kg)	5		17	41
Air supply pressure max. to actuator: 6 bar						
Further technical data of the actuator: refer to data sheet ARI-DP.						

ARI-STEVI® 450 / 451 (DN15-150)

Closing pressures: Pneumatic actuator ARI-DP32

max. permissible closing pressures on flow-to-open P2 = 0.
Observe pressure-temperature-limits, refer to page 2.

DN							15	20	25	32	40	50	65	80	100	125	150
AB A B Mixing function	Kvs-value		standard			(m^3/h)	4	6,3	10	16	25	40	63	100	160	250	320
			reduced			(m^3/h)	2,5	4	6,3	10	16	25	40	63	100	160	250
	max. diff. pressure [1]					(bar)	40				30			25		15	
	Seat-Ø A/B					(mm)	21/20	21/25	27/27	31/32	41/40	51/50	66/60	81/75	101/95	120/120	140/140
	Travel					(mm)	20						30			50	
DP32 250 cm^2 Spring closes A -> AB on air failure (stem retracting by spring) or Spring closes B -> AB on air failure (stem extending by spring)	Spring range (bar)	0,4-1,2	Air supply pressure min. (bar) [2]	1,6	I.	(bar)	18,6	12,6	10,7	7,2	3,9	2,2					
					II.	(bar)	15,4	10,3	8,7	5,8	3	1,6					
					III.	(bar)	8,6	8	7,1	4,6	1,7						
		0,8-2,4		3,2	I.	(bar)	40	31,4	26,8	18,8	11	6,8	3,7	2,2	1,2		
					II.	(bar)	40	29,1	24,8	17,4	10,2	6,3	3,2	1,9	1		
					III.	(bar)	26,4	25,7	23,2	16,2	8,9	5,4	2,9	1,7			
		1,5-2,9		4,4	I.	(bar)		40	40	39,1	23,5	15					
					II.	(bar)		40	40	37,7	22,7	14,4					
					III.	(bar)	40	40	40	36,5	21,4	13,6					
		2,0-3,8		5,8	I.	(bar)				40	32,5	20,8					
					II.	(bar)				40	31,6	20,2					
					III.	(bar)				40	30,3	19,4					

DN							15	20	25	32	40	50	65	80	100	125	150
							mixing plug for diverting										
AB A B Diverting function	Kvs-value		standard			(m^3/h)	4	6,3	10	16	14	25	45	60	95	170	200
			reduced			(m^3/h)	2,5	4	6,3	10							
	max. diff. pressure [1]					(bar)	40				30			25		15	
	Seat-Ø A/B					(mm)	21/20	21/25	27/27	31/32	40/40	50/50	60/60	75/75	90/90	105/105	125/125
	Travel					(mm)	20						30				
DP32 250 cm^2 Spring closes AB -> A on air failure (stem extending by spring) or Spring closes AB -> B on air failure (stem retracting by spring)	Spring range (bar)	0,2-1,0	Air supply pressure min. (bar) [2]	1,2	I.	(bar)	2,7	1,6	1,3								
					II.	(bar)	1,1										
					III.	(bar)											
		0,4-1,2		1,6	I.	(bar)	9,3	6,3	5,3	3,6	4,1	2,3	1,2				
					II.	(bar)	7,7	5,2	4,3	2,9	3,2	1,7					
					III.	(bar)	4,3	4	3,5	2,3	1,9						
		0,8-2,4		3,2	I.	(bar)	22,5	15,7	13,4	9,4	11,6	7,1	4,5	2,7	1,7	1,1	
					II.	(bar)	20,8	14,5	12,4	8,7	10,6	6,5	4	2,3	1,4		
					III.	(bar)	13,2	12,9	11,6	8,1	9,3	5,6	3,7	2,1	1,3		
		1,5-2,9		4,4	I.	(bar)	40	32,1	27,5	19,6	24,5	15,4					
					II.	(bar)	40	30,9	26,5	18,8	23,6	14,8					
					III.	(bar)	28,7	28,4	25,7	18,3	22,3	14					
		2,0-3,8		5,8	I.	(bar)		40	37,6	26,8	33,8	21,4					
					II.	(bar)		40	36,6	26,1	32,9	20,8					
					III.	(bar)	39,8	39,5	35,8	25,5	31,6	19,9					

I. Fig. 450: PTFE-V-ring unit / EPDM-sealing
II. Fig. 450: PTFE- / pure graphite-packing
III. Fig. 451: Bellows seal

[1] max. differential pressure drop

[2] Air supply pressure max. to actuator: 6 bar Restriction: a) 5 bar b) 4,5 bar c) 4 bar d) 3,5 bar e) 3 bar

max. permissible closing pressures on flow-to-open P2 = 0.
Observe pressure-temperature-limits, refer to page 2.

DN							15	20	25	32	40	50	65	80	100	125	150
AB A B Mixing function	Kvs-value		standard			(m³/h)	4	6,3	10	16	25	40	63	100	160	250	320
			reduced			(m³/h)	2,5	4	6,3	10	16	25	40	63	100	160	250
	max. diff. pressure [1]					(bar)	40				30			25		15	
	Seat-Ø A/B					(mm)	21/20	21/25	27/27	31/32	41/40	51/50	66/60	81/75	101/95	120/120	140/140
	Travel					(mm)	20						30			50	
DP33 400 cm² Spring closes A -> AB on air failure (stem retracting by spring) or Spring closes B -> AB on air failure (stem extending by spring)	Spring range (bar)	0,2-1,0	Air supply pressure min. (bar) [2]	1,2	I.	(bar)	13,3 c)[3]	8,8 c)[3]	7,4 c)[3]	4,9 c)[3]	2,4 c)[3]	1,2 c)[3]					
					II.	(bar)	10,1 c)[3]	6,5 c)[3]	5,4 c)[3]	3,4 c)[3]	1,6 c)[3]						
					III.	(bar)	5 a)[3]	4,3 a)[3]	3,8 a)[3]	2,2 a)[3]							
		0,4-1,2		1,6	I.	(bar)	34,2 c)[3]	23,7 c)[3]	20,2 c)[3]	14,1 c)[3]	8,1 c)[3]	4,9 c)[3]	2,5 [3]	1,4 [3]			
					II.	(bar)	31 c)[3]	21,4 c)[3]	18,3 c)[3]	12,7 c)[3]	7,3 c)[3]	4,4 c)[3]	2,1 [3]	1,1 [3]			
					III.	(bar)	19,1 a)[3]	18,5 a)[3]	16,6 a)[3]	11,5 a)[3]	5,9 a)[3]	3,5 a)[3]	1,8 a)[3]				
		0,8-2,4		3,2	I.	(bar)	40 a)[3]	40 a)[3]	40 a)[3]	32,5 a)[3]	19,5 a)[3]	12,3 a)[3]	7 [3]	4,4 [3]	2,6 [3]		
					II.	(bar)	40 a)[3]	40 a)[3]	40 a)[3]	31,1 a)[3]	18,6 a)[3]	11,8 a)[3]	6,5 [3]	4,1 [3]	2,4 [3]		
					III.	(bar)	40 [3]	40 [3]	40 [3]	29,9 [3]	17,3 [3]	10,9 [3]	6,2 [3]	3,9 [3]	2,3 [3]		
		1,5-3,0		4,5	I.	(bar)							14,8	9,6	6		
					II.	(bar)							14,3	9,3	5,8		
					III.	(bar)							14	9,1	5,7		
		1,7-2,7		4,4	I.	(bar)				40 a)	40 a)	29 a)					
					II.	(bar)				40 a)	40 a)	28,4 a)					
					III.	(bar)				40	40	27,6					
		2,0-4,0 (2,3-3,7)		6,0 (6,0)	I.	(bar)						(40)	20,3	13,3	8,4		
					II.	(bar)						(39,5)	19,9	12,9	8,2		
					III.	(bar)						(38,7)	19,6	12,8	8,1		

DN							15	20	25	32	40	50	65	80	100	125	150
							mixing plug for diverting										
AB A B Diverting function	Kvs-value		standard			(m³/h)	4	6,3	10	16	14	25	45	60	95	170	200
			reduced			(m³/h)	2,5	4	6,3	10							
	max. diff. pressure [1]					(bar)	40				30			25		15	
	Seat-Ø A/B					(mm)	21/20	21/25	27/27	31/32	40/40	50/50	60/60	75/75	90/90	105/105	125/125
	Travel					(mm)	20						30				
DP33 400 cm² Spring closes AB -> A on air failure (stem extending by spring) or Spring closes AB -> B on air failure (stem retracting by spring)	Spring range (bar)	0,2-1,0	Air supply pressure min. (bar) [2]	1,2	I.	(bar)	6,6 c)[4]	4,4 c)[4]	3,7 c)[4]	2,4 c)[4]	2,6 c)[4]	1,3 c)[4]					
					II.	(bar)	5 c)[4]	3,3 c)[4]	2,7 c)[4]	1,7 c)[4]	1,7 c)[4]						
					III.	(bar)	2,5 a)[4]	2,2 a)[4]	1,9 a)[4]	1,1 a)[4]							
		0,4-1,2		1,6	I.	(bar)	17,1 c)[4]	11,9 c)[4]	10,1 c)[4]	7 c)[4]	8,5 c)[4]	5,1 c)[4]	3,2 [4]	1,8 [4]	1,1 [4]		
					II.	(bar)	15,5 c)[4]	10,7 c)[4]	9,1 c)[4]	6,3 c)[4]	7,6 c)[4]	4,5 c)[4]	2,6 [4]	1,4 [4]			
					III.	(bar)	9,6 a)[4]	9,2 a)[4]	8,3 a)[4]	5,7 a)[4]	6,3 a)[4]	3,6 a)[4]	2,3 a)[4]	1,2 a)[4]			
		0,8-2,4		3,2	I.	(bar)	38 a)[4]	26,8 a)[4]	23 a)[4]	16,3 a)[4]	20,3 a)[4]	12,7 a)[4]	8,5 [4]	5,2 [4]	3,5 [4]	2,4 [4]	1,6 [4]
					II.	(bar)	36,4 a)[4]	25,6 a)[4]	22 a)[4]	15,6 a)[4]	19,4 a)[4]	12,1 a)[4]	8 [4]	4,9 [4]	3,2 [4]	2,2 [4]	1,4 [4]
					III.	(bar)	23,7 [4]	23,4 [4]	21,2 [4]	15 [4]	18,1 [4]	11,3 [4]	7,6 [4]	4,7 [4]	3,1 [4]	1,9 [4]	1,2 [4]
		1,5-3,0		4,5	I.	(bar)							17,9	11,2	7,7	5,4	3,7
					II.	(bar)							17,3	10,9	7,4	5,2	3,6
					III.	(bar)							17	10,7	7,3	5	3,4
		1,7-2,7		4,4	I.	(bar)	40 a)	40 a)	40 a)	37 a)	40 a)	29,8 a)					
					II.	(bar)	40 a)	40 a)	40 a)	36,3 a)	40 a)	29,3 a)					
					III.	(bar)	40	40	40	35,7	40	28,4					
		2,0-4,0 (2,3-3,7)		6,0 (6,0)	I.	(bar)				(40)	(40)	(40)	24,5	15,5	10,7	7,6	5,3
					II.	(bar)				(40)	(40)	(40)	24	15,2	10,4	7,4	5,1
					III.	(bar)				(40)	(40)	(39,8)	23,6	15	10,3	7,2	5

I. Fig. 450: PTFE-V-ring unit / EPDM-sealing
II. Fig. 450: PTFE- / pure graphite-packing
III. Fig. 451: Bellows seal

[1] max. differential pressure drop

[2] Air supply pressure max. to actuator: 6 bar Restriction: a) 5 bar b) 4,5 bar c) 4 bar d) 3,5 bar e) 3 bar

[3] At mixing function an spring closes direction A->AB, the max. permissible air supply pressure is 3,5 bar.

[4] At diverting function an spring closes direction B->AB, the max. permissible air supply pressure is 3,5 bar.

ARI-STEVI® 450 / 451 (DN15-150)

Closing pressures: Pneumatic actuator ARI-DP34

max. permissible closing pressures on flow-to-open P2 = 0.
Observe pressure-temperature-limits, refer to page 2.

DN							65	80	100	125	150
AB A B **Mixing function**	Kvs-value		standard			(m^3/h)	63	100	160	250	320
			reduced			(m^3/h)	40	63	100	160	250
	max. diff. pressure [1]					(bar)	30	25		15	
	Seat-Ø A/B					(mm)	66/60	81/75	101/95	120/120	140/140
	Travel					(mm)	30			50	
DP34 **800 cm^2** **Spring closes A -> AB on air failure** (stem retracting by spring) or **Spring closes B -> AB on air failure** (stem extending by spring)	Spring range (bar)	0,2-1,0	Air supply pressure min. (bar) [2]	1,2	I.	(bar)	2,5 b)	1,5 b)			
					II.	(bar)	2,1 b)	1,2 b)			
					III.	(bar)	1,8 e)	1 e)			
		0,4-1,2		1,6	I.	(bar)	7 b)	4,4 b)	2,7 b)	1,8	1,2
					II.	(bar)	6,6 b)	4,1 b)	2,5 b)	1,6	1,1
					III.	(bar)	6,3 d)	3,9 d)	2,3 d)	1,4 a)	
		0,8-2,4		3,2	I.	(bar)	16	10,4	6,5	4,5	3,2
					II.	(bar)	15,5	10,1	6,3	4,3	3,1
					III.	(bar)	15,2 b)	9,9 b)	6,2 b)	4,1	3
		1,5-3,0		4,5	I.	(bar)				9,3	6,7
					II.	(bar)				9,1	6,6
					III.	(bar)				8,9	6,5
		2,0-2,9		4,9	III.	(bar)	40	27,7 a)	17,7 a)		
		2,1-3,0		5,1	I.	(bar)	40	29,7	19		
					II.	(bar)	40	29,4	18,8		
		2,0-4,0		6,0	I.	(bar)				12,7	9,2
					II.	(bar)				12,5	9,1
					III.	(bar)				12,3	9
		2,4-3,6		6,0	I.	(bar)		34,2	21,9		
					II.	(bar)		33,9	21,7		
					III.	(bar)					

DN							65	80	100	125	150
AB A B **Diverting function**	Kvs-value		standard			(m^3/h)	45	60	95	170	200
			reduced			(m^3/h)					
	max. diff. pressure [1]					(bar)	30	25		15	
	Seat-Ø A/B					(mm)	60/60	75/75	90/90	105/105	125/125
	Travel					(mm)	30				
DP34 **800 cm^2** **Spring closes AB -> A on air failure** (stem extending by spring) or **Spring closes AB -> B on air failure** (stem retracting by spring)	Spring range (bar)	0,2-1,0	Air supply pressure min. (bar) [2]	1,2	I.	(bar)	3,2 b)	1,8 b)	1,1 b)		
					II.	(bar)	2,7 b)	1,5 b)			
					III.	(bar)	2,3 e)	1,2 e)			
		0,4-1,2		1,6	I.	(bar)	8,6 b)	5,3 b)	3,5 b)	2,4	1,6
					II.	(bar)	8 b)	4,9 b)	3,2 b)	2,2	1,4
					III.	(bar)	7,7 d)	4,7 d)	3,1 d)	2 a)	1,3 a)
		0,8-2,4		3,2	I.	(bar)	19,3	12,2	8,3	5,9	4,1
					II.	(bar)	18,8	11,8	8,1	5,7	3,9
					III.	(bar)	18,4 b)	11,6 b)	7,9 b)	5,5	3,8
		2,1-3,0 2,0-2,9*		5,1 4,9*	I.	(bar)	40	34,7	24	17,4	12,2
					II.	(bar)	40	34,3	23,8	17,2	12
					III.	(bar)	40 a)*	32,4 a)*	22,4 a)*	16,9	11,9
		2,4-3,6		6,0	I.	(bar)		39,9	27,6	20	14,1
					II.	(bar)		39,5	27,4	19,8	13,9
					III.	(bar)				19,6	13,8

I. Fig. 450: PTFE-V-ring unit / EPDM-sealing
II. Fig. 450: PTFE- / pure graphite-packing
III. Fig. 451: Bellows seal

[1] max. differential pressure drop

[2] Air supply pressure max. to actuator: 6 bar Restriction: a) 5 bar b) 4,5 bar c) 4 bar d) 3,5 bar e) 3 bar

ARI-STEVI® 450 / 451 (DN125-150)

Closing pressures: Pneumatic actuator ARI-DP34T

max. permissible closing pressures on flow-to-open P2 = 0.
Observe pressure-temperature-limits, refer to page 2.

DN								125	150
AB A B **Mixing function**	Kvs-value		standard				(m³/h)	250	320
			reduced				(m³/h)	160	250
	max. diff. pressure [1]						(bar)	15	
	Seat-Ø A/B						(mm)	120/120	140/140
	Travel						(mm)	50	
DP34T 1600 cm² Spring closes A -> AB on air failure (stem retracting by spring) or **Spring closes B -> AB on air failure** (stem extending by spring)	Spring range (bar)	0,2-1,0	Air supply pressure min. (bar) [2]	1,2	I.	(bar)		1,7	1,2
					II.	(bar)		1,4	--
					III.	(bar)		1,3 a)	--
		0,4-1,2		1,6	I.	(bar)		4,5	3,2
					II.	(bar)		4,1	2,9
					III.	(bar)		4 a)	2,9 a)
		0,8-2,4		3,2	I.	(bar)		9,9	7,2
					II.	(bar)		9,6	7
					III.	(bar)		9,5	6,9
		1,5-3,0		4,5	I.	(bar)		19,5	14,3
					II.	(bar)		19,1	14
					III.	(bar)		19	13,9
		2,0-4,0		6,0	I.	(bar)		26,3	19,3
					II.	(bar)		26	19
					III.	(bar)		25,9	18,9

DN								125	150
AB A B **Diverting function**	Kvs-value		standard				(m³/h)	170	200
			reduced				(m³/h)		
	max. diff. pressure [1]						(bar)	15	
	Seat-Ø A/B						(mm)	105/105	125/125
	Travel						(mm)	30	
DP34T 1600 cm² Spring closes AB -> A on air failure (stem extending by spring) or **Spring closes AB -> B on air failure** (stem retracting by spring)	Spring range (bar)	0,2-1,0	Air supply pressure min. (bar) [2]	1,2	I.	(bar)		2,4	1,6
					II.	(bar)		1,9	1,2
					III.	(bar)		1,8 a)	1,1 a)
		0,4-1,2		1,6	I.	(bar)		5,9	4,1
					II.	(bar)		5,5	3,7
					III.	(bar)		5,3 a)	3,6 a)
		0,8-2,4		3,2	I.	(bar)		12,9	9,1
					II.	(bar)		12,5	8,7
					III.	(bar)		12,4	8,6
		2,1-3,0		5,1	I.	(bar)		35,9	25,3
					II.	(bar)		35,4	25
					III.	(bar)		35,3	24,9
		2,4-3,6		6,0	I.	(bar)		40	29
					II.	(bar)		40	28,7
					III.	(bar)		40	28,6

I. Fig. 450: EPDM-sealing
II. Fig. 450: PTFE- / pure graphite-packing
III. Fig. 451: Bellows seal

[1] max. differential pressure drop

[2] Air supply pressure max. to actuator: 6 bar Restriction: a) 5 bar b) 4,5 bar c) 4 bar d) 3,5 bar e) 3 bar

Control valve in 3-way-form with electric actuator ARI-PREMIO (3-way mixing valve / 3-way diverting valve)

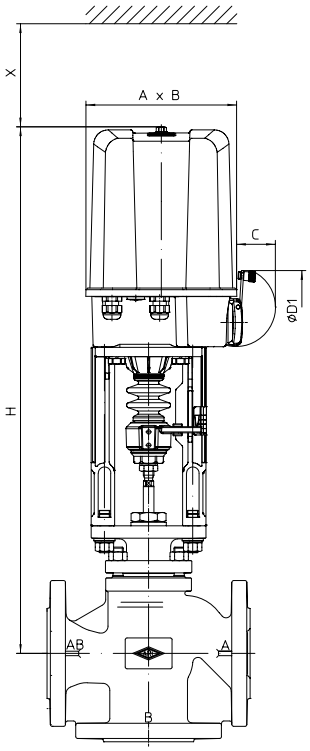

Fig. 450

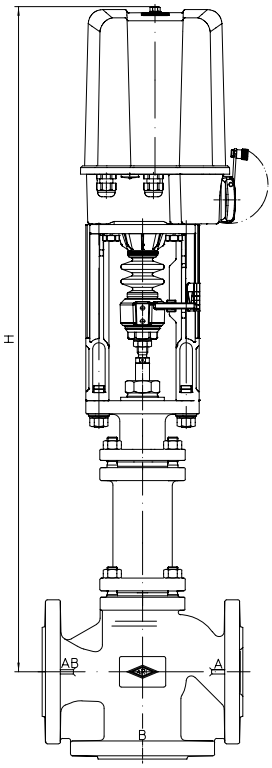

Fig. 451

Actuator data		2,2 - 5 kN	12 - 25 kN
A	(mm)	171	210
B	(mm)	156	184
C	(mm)	50	90
Ø D1	(mm)	90	130
X	(mm)	150	200
Further technical data of the actuator: refer to data sheet ARI-PREMIO/PREMIO-Plus 2G			

Heights and weights

DN				15	20	25	32	40	50	65	80	100	125	150
Fig. 450	**2,2 kN**	H	(mm)	559	559	563	589	595	593	629	645	664	731	--
		PN16	(kg)	11	12	13	15	18	22	29	35	52	73	--
		PN40	(kg)	11	12	13	16	20	24	31	38	56	100	--
	5 kN	H	(mm)	559	559	563	589	595	593	629	645	664	731	793
		PN16	(kg)	12	13	14	16	20	23	30	37	53	74	101
		PN40	(kg)	12	13	14	17	21	25	32	39	57	101	144
	12 kN 15 kN	H	(mm)	--	--	737	763	769	767	803	819	838	885	947
		PN16	(kg)	--	--	18	20	24	27	34	41	57	78	105
		PN40	(kg)	--	--	18	21	25	29	36	43	61	105	148
	25 kN	H	(mm)	--	--	--	--	--	--	--	--	--	885	947
		PN16	(kg)	--	--	--	--	--	--	--	--	--	79	106
		PN40	(kg)	--	--	--	--	--	--	--	--	--	106	149
Fig. 451	**2,2 kN**	H	(mm)	744	744	748	774	764	758	864	877	893	--	--
		PN16	(kg)	14	15	16	18	23	26	35	45	63	--	--
		PN40	(kg)	14	15,3	16,6	19,2	24,5	28	37,9	48,7	68	--	--
	5 kN	H	(mm)	744	744	748	774	764	758	864	877	893	1086	1119
		PN16	(kg)	15	16	17	19	24	27	36	46	64	84	111
		PN40	(kg)	15	16	18	20	25,6	29	39	50	69	112	155
	12 kN 15 kN	H	(mm)	--	--	922	948	938	932	1038	1051	1067	1240	1273
		PN16	(kg)	--	--	21	23	28	31	40	50	68	88	115
		PN40	(kg)	--	--	22	24	30	33	43	54	73	116	159
	25 kN	H	(mm)	--	--	--	--	--	--	--	--	--	1240	1273
		PN16	(kg)	--	--	--	--	--	--	--	--	--	89	116
		PN40	(kg)	--	--	--	--	--	--	--	--	--	117	160

Further dimensions refer to pages 16 - 17.

ARI-STEVI® 450 / 451 (DN15-150)

Closing pressures: Electric actuator ARI-PREMIO / PREMIO-Plus 2G

max. permissible closing pressures on flow-to-open P2 = 0.
Observe pressure-temperature-limits, refer to page 2.

DN					15	20	25	32	40	50	65	80	100	125	150
AB A B **Mixing function**	Kvs-value	standard		(m^3/h)	4	6,3	10	16	25	40	63	100	160	250	320
		reduced		(m^3/h)	2,5	4	6,3	10	16	25	40	63	100	160	250
	max. diff. pressure [1]			(bar)	40				30			25		15	
	Seat-Ø A/B			(mm)	21/20	21/25	27/27	31/32	41/40	51/50	66/60	81/75	101/95	120/120	140/140
	Travel			(mm)	20						30			50	
2,2 kN	Closing pressure		I.	(bar)	40	35,9	30,8	21,7	12,8	8	4,3	2,7	1,5		
			II.	(bar)	40	33,7	28,8	20,2	11,9	7,4	3,9	2,3	1,3		
			III.	(bar)	30,7	30,1	27,1	19,1	10,6	6,5	3,6	2,2	1,2		
	Operating time			(s)	53						79				
	Operating speed [2]			(mm/s)	0,38										
5 kN	Closing pressure		I.	(bar)		40	40	40	33,2	21,3	12,3	8	4,9	3,4	2,4
			II.	(bar)		40	40	40	32,3	20,7	11,9	7,6	4,7	3,2	2,3
			III.	(bar)	40	40	40	40	31	19,8	11,6	7,5	4,6	3	2,1
	Operating time			(s)	53						79			132	
	Operating speed			(mm/s)	0,38										
12 kN	Closing pressure		I.	(bar)					40	40	32,3	21,2	13,5	9,5	6,9
			II.	(bar)					40	40	31,8	20,9	13,3	9,3	6,8
			III.	(bar)					40	40	31,6	20,7	13,2	9,1	6,6
	Operating time			(s)					53			79		132	
	Operating speed			(mm/s)					0,38						
15 kN	Closing pressure		I.	(bar)							40	26,9	17,2	12,1	8,8
			II.	(bar)							40	26,6	17	11,9	8,7
			III.	(bar)							40	26,4	16,9	11,7	8,5
	Operating time			(s)							79			132	
	Operating speed			(mm/s)							0,38				
25 kN	Closing pressure		I.	(bar)										20,8	15,2
			II.	(bar)										20,6	15,1
			III.	(bar)										20,4	14,9
	Operating time			(s)										132	
	Operating speed			(mm/s)										0,38	

DN					15	20	25	32	40	50	65	80	100	125	150
					mixing plug for diverting										
AB A B **Diverting function**	Kvs-value	standard		(m^3/h)	4	6,3	10	16	14	25	45	60	95	170	200
		reduced		(m^3/h)	2,5	4	6,3	10							
	max. diff. pressure [1]			(bar)	40				30			25		15	
	Seat-Ø A/B			(mm)	21/20	21/25	27/27	31/32	40/40	50/50	60/60	75/75	90/90	105/105	125/125
	Travel			(mm)	20						30				
2,2 kN	Closing pressure		I.	(bar)	25,7	18	15,4	10,8	13,4	8,2	5,4	3,2	2	1,3	
			II.	(bar)	24,1	16,8	14,4	10,1	12,5	7,6	4,8	2,8	1,8	1,1	
			III.	(bar)	15,4	15	13,6	9,5	11,1	6,8	4,5	2,6	1,6		
	Operating time			(s)	53						79				
	Operating speed [2]			(mm/s)	0,38										
5 kN	Closing pressure		I.	(bar)	40	40	38,5	27,4	34,6	21,9	15	9,4	6,4	4,5	3,1
			II.	(bar)	40	40	37,5	26,7	33,7	21,3	14,4	9	6,1	4,3	2,9
			III.	(bar)	40	40	36,6	26,1	32,3	20,4	14,1	8,8	6	4	2,7
	Operating time			(s)	53						79				
	Operating speed			(mm/s)	0,38										
12 kN	Closing pressure		I.	(bar)			40	40	40	40	38,9	24,8	17,1	12,3	8,6
			II.	(bar)			40	40	40	40	38,4	24,4	16,9	12,1	8,5
			III.	(bar)			40	40	40	40	38	24,2	16,7	11,9	8,3
	Operating time			(s)			53				79				
	Operating speed			(mm/s)			0,38								
15 kN	Closing pressure		I.	(bar)							40	31,4	21,7	15,7	11
			II.	(bar)							40	31,1	21,5	15,5	10,9
			III.	(bar)							40	30,8	21,3	15,3	10,7
	Operating time			(s)							79				
	Operating speed			(mm/s)							0,38				
25 kN	Closing pressure		I.	(bar)										26,9	19,0
			II.	(bar)										26,7	18,8
			III.	(bar)										26,5	18,7
	Operating time			(s)										79	
	Operating speed			(mm/s)										0,38	

Further operating speeds: refer to data sheet ARI-PREMIO/PREMIO-Plus 2G

I. Fig. 450: PTFE-V-ring unit / EPDM-sealing
II. Fig. 450: PTFE- / pure graphite-packing
III. Fig. 451: Bellows seal

$$\text{Operating time [s]} = \frac{\text{Travel [mm]}}{\text{Operating speed [mm/s]}}$$

[1] max. differential pressure drop
[2] Based on a frequency of 50Hz the control speed and power consumption of the synchronous motors PREMIO 2,2kN are 20% higher at frequency of 60 Hz.

Control valve in straightway form with electric actuator AUMA (3-way mixing valve / 3-way diverting valve)

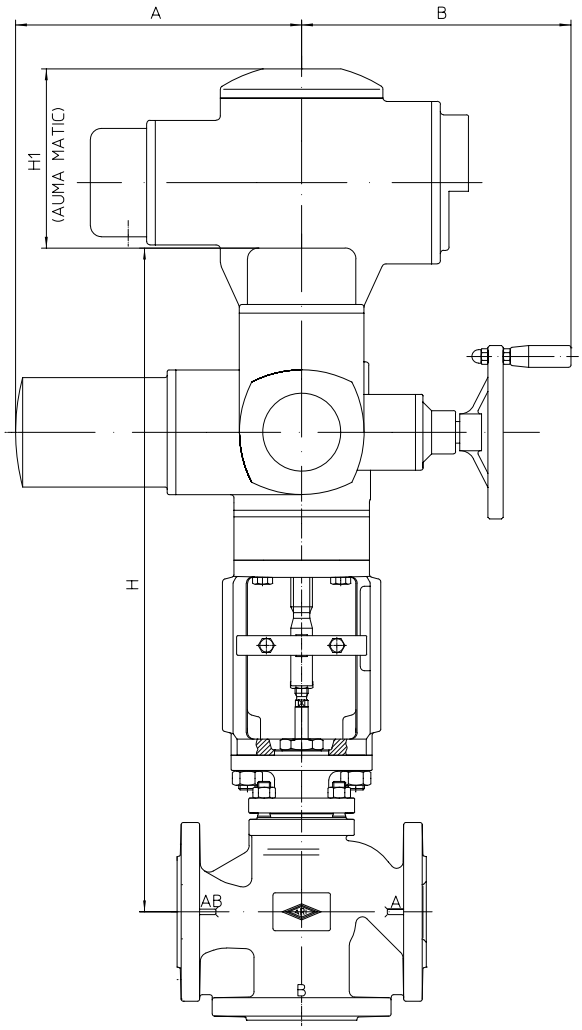

Fig. 450

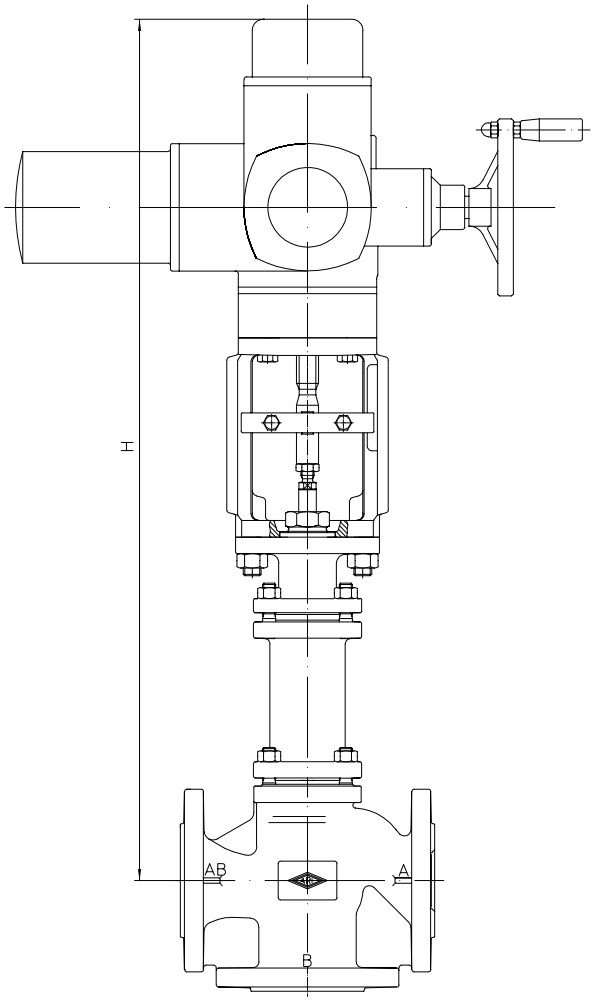

Fig. 451

Actuator data		SAR 07.2	SAR 07.6	SAR 10.2	SAR 14.2
A	(mm)	265		283	389
B	(mm)	249		254	336
H1 (AUMA MATIC)	(mm)	130			182
Supply voltage: 400V 50Hz 3~ (Other voltages on request) Technical data for actuator refer to price list.					

Heights and weights

DN				25	32	40	50	65	80	100	125	150
Fig. 450	**SAR 07.2** **SAR 07.6**	H	(mm)	633	659	665	663	699	715	734	781	843
		PN16	(kg)	34	37	40	46	52	59	75	96	124
		PN40	(kg)	35	38	42	47	54	61	79	124	166
	SAR 10.2	H	(mm)	--	--	--	--	701	717	736	783	845
		PN16	(kg)	--	--	--	--	55	61	78	99	126
		PN40	(kg)	--	--	--	--	57	64	82	126	169
	SAR 14.2	H	(mm)	--	--	--	--	--	--	--	880	913
		PN16	(kg)	--	--	--	--	--	--	--	148	172
		PN40	(kg)	--	--	--	--	--	--	--	157	189
Fig. 451	**SAR 07.2** **SAR 07.6**	H	(mm)	818	844	834	828	934	947	963	1136	1169
		PN16	(kg)	38	40	45	50	59	69	86	106	134
		PN40	(kg)	39	41	46	51	61	72	91	134	177
	SAR 10.2	H	(mm)	--	--	--	--	--	--	--	1138	1171
		PN16	(kg)	--	--	--	--	--	--	--	109	136
		PN40	(kg)	--	--	--	--	--	--	--	137	179
	SAR 14.2	H	(mm)	--	--	--	--	--	--	--	1439	1472
		PN16	(kg)	--	--	--	--	--	--	--	173	199
		PN40	(kg)	--	--	--	--	--	--	--	184	217

For version with AUMA SAR Ex other heights.
Further dimensions refer to pages 16 - 17.

max. permissible closing pressures on flow-to-open P2 = 0.
Observe pressure-temperature-limits, refer to page 2.

Fig. 450	DN				25	32	40	50	65	80	100	125	150
AB A B Mixing function	Kvs-value	standard		(m^3/h)	10	16	25	40	63	100	160	250	320
		reduced		(m^3/h)	6,3	10	16	25	40	63	100	160	250
	max. diff. pressure [1]			(bar)	40		30			25		15	
	Seat-Ø A/B			(mm)	27/27	31/32	41/40	51/50	66/60	81/75	101/95	120/120	140/140
	Travel			(mm)	20				30			50	
SAR 07.2 Output drive Form A TR 20 x 4 - LH	Closing pressure	I./II.	shut off	(bar)	40	40	40	40	40	29,7	19	13,4	9,7
			controlling [2]	(bar)	40	40	40	36,5	21,4	14	8,8	6,1	4,4
	Torque			(Nm)	15	15	15	20	30	30	30	30	30
	Operating time (50 Hz)			(s)	54				56			94	
	Output drive			(rpm)	5,6				8			8	
SAR 07.6 Output drive Form A TR 26 x 5 - LH	Closing pressure	I./II.	shut off	(bar)				40	40	40	26,9	18,9	13,8
			controlling [2]	(bar)				40	30,5	20	12,8	8,9	6,5
	Torque			(Nm)				30	40	60	60	60	60
	Operating time (50 Hz)			(s)				43	64			55	
	Output drive			(rpm)				5,6	5,6			11	
SAR 10.2 Output drive Form A TR 26 x 5 - LH	Closing pressure	I./II.	shut off	(bar)					40	40	31,6	32,3	23,7
			controlling [2]	(bar)					40	40	26,9	18,9	13,8
	Torque			(Nm)					60	60	70	100	100
	Operating time (50 Hz)			(s)					64			55	
	Output drive			(rpm)					5,6			11	
SAR 14.2 Output drive Form A TR 30 x 6 - LH	Closing pressure	II.	shut off	(bar)								40	40
			controlling [2]	(bar)								31,3	22,9
	Torque			(Nm)								175	225
	Operating time (50 Hz)			(s)								63	
	Output drive			(rpm)								8	

Fig. 451	DN				25	32	40	50	65	80	100	125	150
AB A B Mixing function	Kvs-value	standard		(m^3/h)	10	16	25	40	63	100	160	250	320
		reduced		(m^3/h)	6,3	10	16	25	40	63	100	160	250
	max. diff. pressure [1]			(bar)	40		30			25		15	
	Seat-Ø A/B			(mm)	27/27	31/32	41/40	51/50	66/60	81/75	101/95	120/120	140/140
	Travel			(mm)	20				30			50	
SAR 07.2 Output drive Form A TR 20 x 4 - LH	Closing pressure	III.	shut off	(bar)	40	40	40	40	40	29,5	18,9	13,2	9,6
			controlling [2]	(bar)	40	40	40	35,7	21,1	13,8	8,7	5,9	4,3
	Torque			(Nm)	15	15	15	20	30	30	30	30	30
	Operating time (50 Hz)			(s)	54				56			94	
	Output drive			(rpm)	5,6				8			8	
SAR 07.6 Output drive Form A TR 26 x 5 - LH	Closing pressure	III.	shut off	(bar)				40	40	30,8	19,7	18,8	13,7
			controlling [2]	(bar)				40	30,2	19,8	12,6	8,7	6,3
	Torque			(Nm)				30	40	45	45	60	60
	Operating time (50 Hz)			(s)				43	64			55	
	Output drive			(rpm)				5,6	5,6			11	
SAR 10.2 Output drive Form A TR 26 x 5 - LH	Closing pressure	III.	shut off	(bar)								28,8	21,1
			controlling [2]	(bar)								18,8	13,7
	Torque			(Nm)								90	90
	Operating time (50 Hz)			(s)								55	
	Output drive			(rpm)								11	
SAR 14.2 Output drive Form A TR 30 x 6 - LH	Closing pressure	III.	shut off	(bar)								40	38,9
			controlling [2]	(bar)								31,2	22,9
	Torque			(Nm)								175	200
	Operating time (50 Hz)			(s)								63	
	Output drive			(rpm)								8	

I. Fig. 450: PTFE-V-ring unit / EPDM-sealing; **II. Fig. 450: PTFE- / pure graphite-packing;** **III. Fig. 451: Bellows seal**

[1] max. differential pressure drop
[2] Restrictions through max. permissible torque of the actuator at controlling operation.

ARI-STEVI® 450 / 451 (DN25-150)

Closing pressures: Electric actuator AUMA SAR

max. permissible closing pressures on flow-to-open P2 = 0.
Observe pressure-temperature-limits, refer to page 2.

Fig. 450	DN				25	32	40	50	65	80	100	125	150
					mixing plug for diverting								
AB → A, B **Diverting function**	Kvs-value	standard		(m^3/h)	10	16	14	25	45	60	95	170	200
		reduced		(m^3/h)	6,3	10							
	max. diff. pressure [1]			(bar)	40		30			25		15	
	Seat-Ø A/B			(mm)	27/27	31/32	40/40	50/50	60/60	75/75	90/90	105/105	125/125
	Travel			(mm)	20				30				
SAR 07.2 Output drive Form A TR 20 x 4 - LH	Closing pressure	I./II.	shut off	(bar)	40	40	40	40	40	34,7	24	17,4	12,2
			controlling [2]	(bar)	40	40	40	37,6	25,8	16,4	11,2	8	5,6
	Torque			(Nm)	15	15	15	20	25	30	30	30	30
	Operating time			(s)	54				56				
	Output drive			(rpm)	5,6				8				
SAR 07.6 Output drive Form A TR 26 x 5 - LH	Closing pressure	I./II.	shut off	(bar)				40	40	40	33,9	24,6	17,3
			controlling [2]	(bar)				40	36,8	23,4	16,2	11,6	8,1
	Torque			(Nm)				30	35	50	60	60	60
	Operating time			(s)				43	64				
	Output drive			(rpm)				5,6	5,6				
SAR 10.2 Output drive Form A TR 26 x 5 - LH	Closing pressure	I./II.	shut off	(bar)					40	40	39,8	40	29,5
			controlling [2]	(bar)					40	40	33,9	24,6	17,3
	Torque			(Nm)					60	60	70	100	100
	Operating time			(s)					64				
	Output drive			(min $^{-2}$)					5,6				
SAR 14.2 Output drive Form A TR 30 x 6 - LH	Closing pressure	II.	shut off	(bar)								40	40
			controlling [2]	(bar)								40	28,6
	Torque			(Nm)								120	175
	Operating time			(s)								38	
	Output drive			(rpm)								8	

Fig. 451	DN				25	32	40	50	65	80	100	125	150
					mixing plug for diverting								
AB → A, B **Diverting function**	Kvs-value			(m^3/h)	10	16	14	25	45	60	95	170	200
					6,3	10							
	max. diff. pressure [1]			(bar)	40		30			25		15	
	Seat-Ø A/B			(mm)	27/27	31/32	40/40	50/50	60/60	75/75	90/90	105/105	125/125
	Travel			(mm)	20				30				
SAR 07.2 Output drive Form A TR 20 x 4 - LH	Closing pressure	III.	shut off	(bar)	40	40	40	40	40	34,5	23,9	17,1	12
			controlling [2]	(bar)	40	40	40	36,7	25,5	16,1	11,1	7,8	5,4
	Torque			(Nm)	15	15	15	20	25	30	30	30	30
	Operating time			(s)	54				56				
	Output drive			(min $^{-2}$)	5,6				8				
SAR 07.6 Output drive Form A TR 26 x 5 - LH	Closing pressure	III.	shut off	(bar)				40	40	35,9	24,9	24,3	17,1
			controlling [2]	(bar)				40	36,4	23,2	16	11,4	7,9
	Torque			(Nm)				30	35	45	45	60	60
	Operating time			(s)				43	64				
	Output drive			(min $^{-2}$)				5,6	5,6				
SAR 10.2 Output drive Form A TR 26 x 5 - LH	Closing pressure	III.	shut off	(bar)								37,3	26,3
			controlling [2]	(bar)								24,3	17,1
	Torque			(Nm)								90	90
	Operating time			(s)								64	
	Output drive			(min $^{-2}$)								5,6	
SAR 14.2 Output drive Form A TR 30 x 6 - LH	Closing pressure	III.	shut off	(bar)								40	35,9
			controlling [2]	(bar)								40	28,5
	Torque			(Nm)								120	150
	Operating time			(s)								38	
	Output drive			(min $^{-2}$)								8	

I. Fig. 450: PTFE-V-ring unit / EPDM-sealing; **II. Fig. 450: PTFE- / pure graphite-packing;** **III. Fig. 451: Bellows seal**

[1] max. differential pressure drop

[2] Restrictions through max. permissible torque of the actuator at controlling operation.

Control valve in 3-way-form

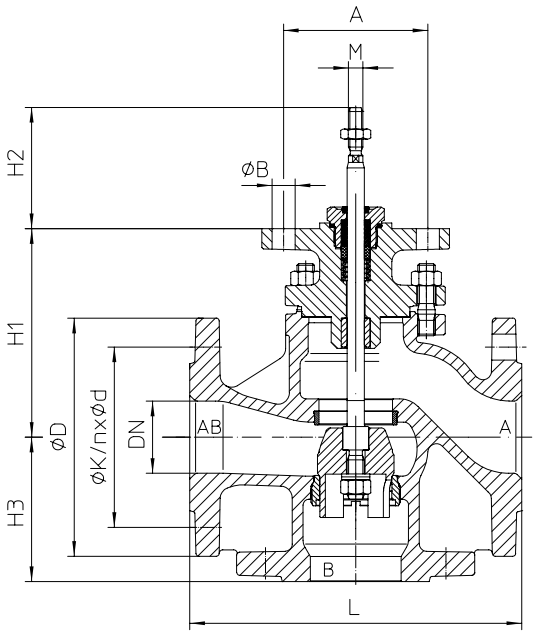

Fig. 450
DN15-150
(e.g.: DP32-34; PREMIO 2,2-25kN; AUMA 07.2-10.2)

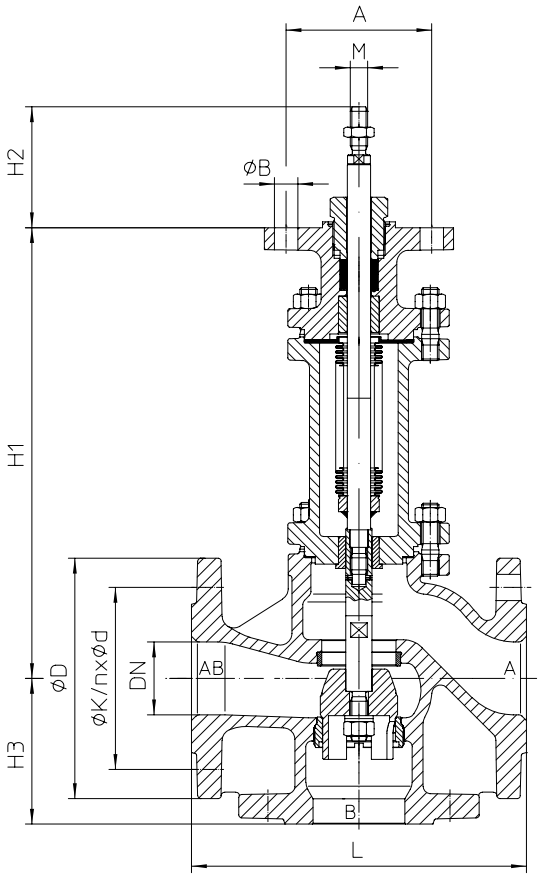

Fig. 451
DN15-150
(e.g.: DP32-34; PREMIO 2,2-25kN; AUMA 07.2-10.2)

DN			15	20	25	32	40	50	65	80	100	125	150
Dimensions													
M	Fig. 450	(mm)	M10						M14x1,5			M16x1,5	
	Fig. 451	(mm)	M12									M16	
H1	Fig. 450	(mm)	111	111	115	141	147	145	181	197	216	263	325
	Fig. 451	(mm)	296	296	300	326	316	310	416	429	445	618	651
H2	Fig. 450 / Fig. 451	(mm)	83										
H3	Fig. 450 / Fig. 451	(mm)	65	70	75	80	90	100	120	130	150	200	210
A	Fig. 450 / Fig. 451	(mm)	100										
n x ØB	Fig. 450 / Fig. 451	(mm)	2 x 16										
Face-to-face dimension FTF series 1 according to DIN EN 558													
L		(mm)	130	150	160	180	200	230	290	310	350	400	480
Flanges acc. to DIN EN 1092-1/-2			Flange holes / -thickness tolerances acc. to DIN 2533/2544/2545										
ØD	PN16	(mm)	95	105	115	140	150	165	185	200	220	250	285
	PN25 / 40	(mm)									235	270	300
ØK	PN16	(mm)	65	75	85	100	110	125	145	160	180	210	240
	PN25 / 40	(mm)									190	220	250
n x Ød	PN16	(mm)	4 x 14			4 x 18				8 x 18			8 x 22
	PN25 / 40	(mm)	4 x 14			4 x 18			8 x 18		8 x 22	8 x 26	
Weights													
Fig. 450	PN16 (JL 1040)	(kg)	5,1	6,1	7,1	9,7	13	16,8	23,5	30	46,5	67,4	94,8
	PN40 (1.0619+N)	(kg)	5,6	6,7	7,7	10,6	14,2	18,3	25,6	32,6	50,6	94,9	137,6
Fig. 451	PN16 (JL 1040)	(kg)	8,1	9,1	10,3	12,7	17,5	20,7	29,8	39,7	57,4	77,4	104,8
	PN40 (1.0619+N)	(kg)	8,8	9,9	11,2	13,8	19,1	22,6	32,5	43,3	62,6	105,4	148,1
max. permissible thrust													
Fig. 450		(kN)	12,7						29,5			40,6	
Fig. 451		(kN)	18,2									37	

Control valve in 3-way-form

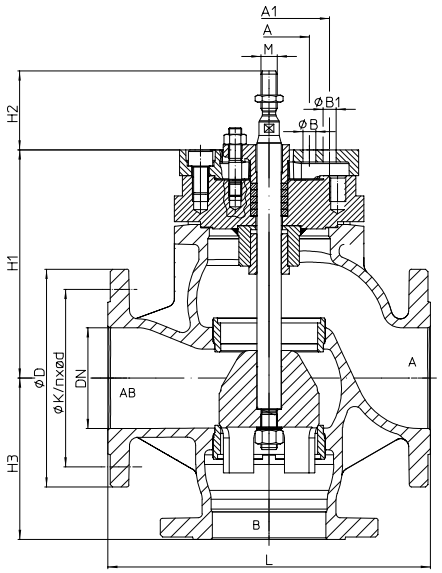

Fig. 450
DN125-150
(e.g.: DP34T-34Tri)

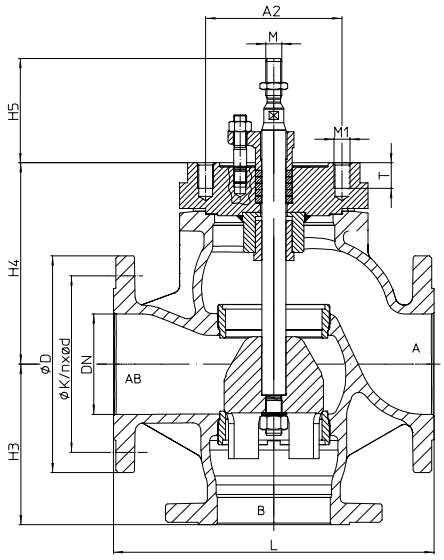

Fig. 450
DN125-150
(e.g.: DP35; AUMA 14.2-14.6)

DN			125	150
Dimensions				
M	Fig. 450 / 451	(mm)	M27	
H1	Fig. 450	(mm)	283	316
	Fig. 451	(mm)	690	723
H2	Fig. 450	(mm)	98	
	Fig. 451	(mm)	185	
H3	Fig. 450/451	(mm)	200	210
H4	Fig. 450	(mm)	658	961
H5	Fig. 450	(mm)	130	
A	Fig. 450	(mm)	100	
n x ØB	Fig. 450	(mm)	2 x 16	
A1	Fig. 450 / 451	(mm)	150	
n x ØB1	Fig. 450 / 451	(mm)	4 x 16	
A2	Fig. 450	(mm)	170	
M1	Fig. 450	(mm)	M20	
T	Fig. 450	(mm)	32	
Face-to-face dimension FTF series 1 according to DIN EN 558				
L		(mm)	400	480
Flanges acc. to DIN EN 1092-1/-2				
ØD	PN16	(mm)	250	285
	PN25 / 40	(mm)	270	300
ØK	PN16	(mm)	210	240
	PN25 / 40	(mm)	220	250
n x Ød	PN16	(mm)	8 x 18	8 x 22
	PN25 / 40	(mm)	8 x 26	8 x 26
Weights				
Fig. 450	PN16 (JL 1040)	(kg)	82	106
	PN40 (1.0619+N)	(kg)	91	123
Fig. 451	PN16 (JL 1040)	(kg)	107	133
	PN40 (1.0619+N)	(kg)	118	151
max. permissible thrust				
Fig. 450		(kN)	112	
Fig. 451		(kN)	70	

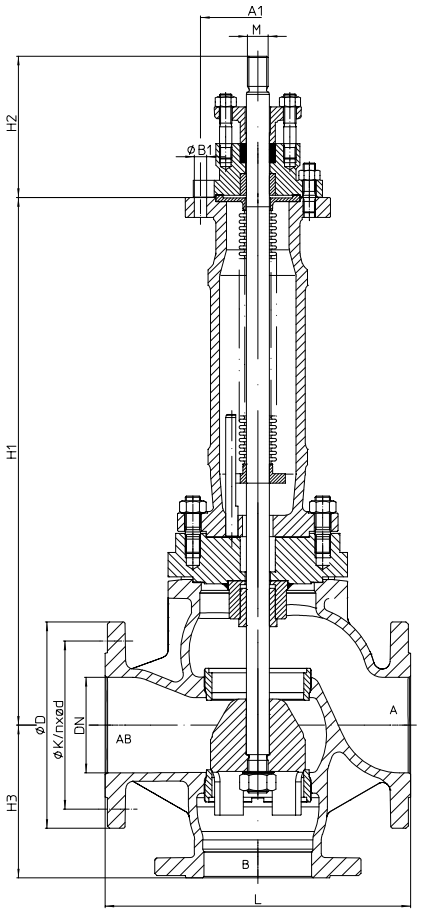

Fig. 451
DN125-150
(e.g.: DP34T-35; AUMA 14.2)

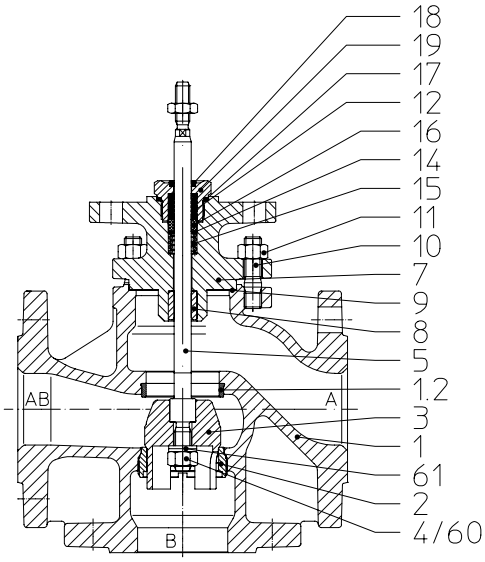

I. PTFE-V-ring unit

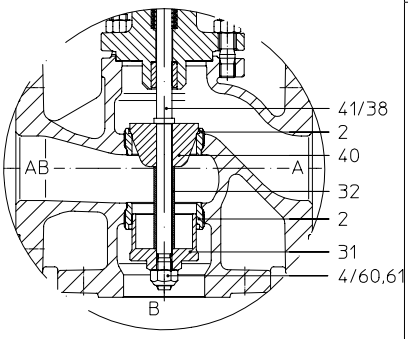

Diverting plug DN40 upwards

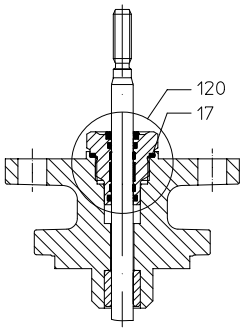

I. EPDM-sealing

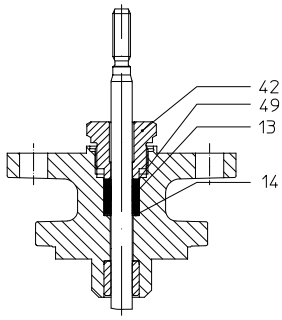

II. PTFE- / pure graphite-packing

Pos.	Sp.p.	Description	Fig. 12.450	Fig. 22.450 / Fig. 23.450	Fig. 34.450 / Fig. 35.450	Fig. 55.450
1		Body	5.1301	5.3103	1.0619+N	1.4408
1.2		Seat ring	1.4021+QT			--
2	x	Seat ring	1.4021+QT			1.4571
3	x	Plug	1.4021+QT			1.4571
4	x	Hexagon nut	8-A2B		--	
5	x	Spindle	1.4021+QT			1.4571
7		Mounting bonnet	5.3103		1.0619+N	1.4408
8		Guide bushing	1.4021+QT (hardened)			1.4571
9	x	Gasket	Pure graphite (CrNi laminated with graphite)			
10		Stud	1.7218			A4 - 70
11		Hexagon nuts	1.1181			A4
12	Set: refer to Pos. 100	V-ring unit	PTFE			
14		Washer	1.4301			
15		Compression spring	1.4310			
16		Bush	PTFE (strengthened)			
17		Gasket	Cu / Soft iron			1.4571
18		Scraper	PTFE (strengthened)			
13/49	x	Packing ring	PTFE or Pure graphite			
19	x	Screw joint	1.4305			
31	x	Plug	1.4021+QT			1.4571
32	x	Distance bush	1.4301			
38	x	Stem adapter	1.4021+QT			1.4571
40	x	Plug	1.4021+QT			1.4571
41	x	Spindle	1.4021+QT			1.4571
42	x	Screw joint	1.4305			
60	x	Hexagon nut	--		A4	
61		Lock washer pair	--		A4	

Stem sealings Fig. 450			
100	x	V-ring unit (set)	Set of: Pos. 12, 14, 15, 16, 17, 18
120	x	EPDM-sealing, cpl.	EPDM / 1.4021+QT / 1.4305
13/49	x	Packing ring	PTFE
13/49	x	Packing ring	Pure graphite
	└ Spare parts		

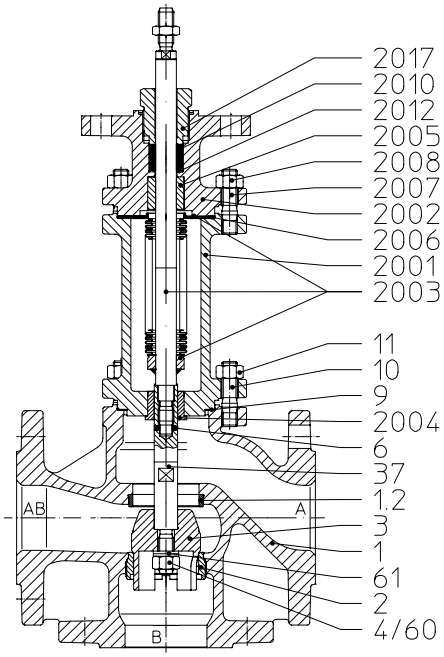

Ill. PTFE-packing / Pure graphite-packing

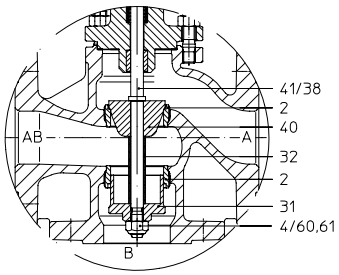

Diverting plug DN40 upwards

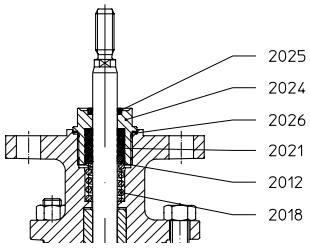

Ill. Stainless steel-bellow with V-ring unit

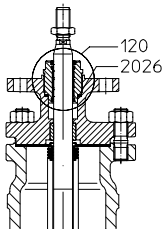

Ill. Stainless steel bellows seal with EPDM-sealing

Pos.	Sp.p.	Description	Fig. 12.451	Fig. 22.451 / Fig. 23.451	Fig. 34.451 / Fig. 35.451	Fig. 55.451
1		Body	5.1301	5.3103	1.0619+N	1.4408
1.2		Seat ring	1.4021+QT			--
2	x	Seat ring	1.4021+QT			1.4571
3	x	Plug	1.4021+QT			1.4571
4	x	Hexagon nut	8-A2B		--	
6	x	Clamping sleeve	1.4310			A2
9	x	Gasket	Pure graphite (CrNi laminated with graphite)			
10		Stud	1.7218			A4 - 70
11		Hexagon nuts	1.1181			A4
2001		Bellows housing	5.3103		1.0619+N	1.4408
2002		Mounting bonnet	5.3103		1.0619+N	1.4408
2003	x	Stem- / Bellows unit	1.4021+QT / 1.4541			1.4571
2004		Guide bushing	1.4021+QT (hardened)			1.4571
2005		Guide bushing	1.4021+QT (hardened)			1.4571
2006	x	Gasket	Pure graphite (CrNi laminated with graphite)			
2007		Stud	1.7218			A4 - 70
2008		Hexagon nuts	1.1181			A4
2010	x	Packing ring	Pure graphite			
2012	x	Washer	1.4301			
2017	x	Screw joint	1.4305			
2012	Set: refer to Pos. 100	Washer	1.4301			
2018		Compression spring	1.4310			
2021		V-ring unit	PTFE			
2024		Screw joint	1.4305			
2025		Scraper	PTFE			
2026		Gasket	1.4571			
31	x	Plug	1.4021+QT			1.4571
32	x	Distance bush	1.4301			
37	x	Stem adapter	1.4021+QT			1.4571
38	x	Stem adapter	1.4021+QT			1.4571
40	x	Plug	1.4021+QT			1.4571
41	x	Spindle	1.4021+QT			1.4571
60	x	Hexagon nut	--		A4	
61		Lock washer pair	--		A4	

Stem sealings Fig. 451			
2010	x	Packing ring	Pure graphite
100	x	V-ring unit (set)	Set of: Pos. 2012 - 2026
120	x	EPDM-sealing, cpl.	EPDM / 1.4021+QT / 1.4305
	└ Spare parts		

myValve® - Your Valve Sizing-Program.

myValve® is a powerful software tool that not only helps you size your system components; it also gives you instant access to all other data about the selected product, such as order information, spare parts drawings, operating instructions, data sheets, etc., whenever you need it.

Contents:

Module ARI-control valves STEVI-calculation

- Sizing (calculation of flow quantity Kv, volume flow Q, pressure drop Δp, sound level and selecting the valve.)

Media:

Integrated media-databank (more than 160 media) with conditions:

- Vapours / gases
- Steam (saturated and superheated)
- Liquids

Special features:

- Project administration of the calculation and product data incl. spare part drawings concerning to project and tag number.
- Direct output or calculation and product data in PDF format.
- Product data could be taken for a direct order.
- SI- and ANSI-units with direct conversion to another databank.
- Settings with over pressure or absolute pressure.
- All ARI valves are integrated in a databank.
- Direct access concerning to the product on data sheets, operating instructions, pressure-temperature-diagram and spare part drawings
- Operation in company networks possible (no complex installations on individually PCs necessary).
- Extensive catalogue extending over several product groups.

System Requirements:

Windows operating systems, Linux, etc.